CEBU INSTITUTE OF TECHNOLOGY
UNIVERSITY

IT342-G2
SYSTEMS INTEGRATION AND ARCHITECTURE 1

FUNCTIONAL REQUIREMENTS SPECIFICATION (FRS)

Project Title: Mini App – User Registration & Authentication

Prepared By: Sevilla, John Emmanuel S.

Date of Submission: February 2, 2026

Version: 1.0

Table of Contents

1. Introduction 3

1.1. Purpose 3
1.2. Scope 3
1.3. Definitions, Acronyms, and Abbreviations 3
2. Overall Description 3
2.1. System Perspective 3
2.2. User Classes and Characteristics 4
2.3. Operating Environment 4
2.4. Assumptions and Dependencies 4
3. System Features and Functional Requirements 5
3.1. Feature 1: 5
3.2. Feature 2: 5
4. Non-Functional Requirements 5
5. System Models (Diagrams) 6
5.1. ERD 6
5.2. Use Case Diagram 7
5.3. Activity Diagram 8
5.4. Class Diagram 9
5.5. Sequence Diagram 10
6. Appendices 11

1. Introduction

1.1. Purpose

This document specifies a web-based authentication and user-access system that supports registration, login, session-based access control, and secure navigation to user features (Dashboard, Profile, Protected Pages). Intended for developers, testers, and evaluators reviewing requirements and system behavior.

1.2. Scope

- Guest can register and login
- System validates credentials, generates a session/token, and redirects to Dashboard
- Authenticated user can view Dashboard, Profile, Protected Pages
- User can logout, which clears the session/token and returns to Login

Out of scope:

- Password reset / MFA
- Admin management panels
- Payments, notifications, third-party identity providers

1.3. Definitions, Acronyms, and Abbreviations

- **Guest:** Unauthenticated visitor.
- **Authenticated User:** Logged-in user with an active session token.
- **Session/Token:** Temporary credential enabling access to protected actions.
- **ERD:** Entity Relationship Diagram (database model).
- **UML:** Unified Modeling Language.
- **MVC:** Model–View–Controller pattern (controllers manage flow).

2. Overall Description

2.1. System Perspective

- UI Pages (Registration/Login/Dashboard/Profile/Protected Pages)
- Controllers (RegistrationController, LoginController, etc.) managing flow
- Database layer storing user records (ERD shows User table)
- Session/token mechanism for authorization checks

2.2. User Classes and Characteristics

Guest

- Can access public pages (landing, register, login)
- Goal: create account or authenticate

Authenticated User

- Has a valid session token
- Can access Dashboard, Profile, Protected Pages; can logout

(Optional) Role-based user

- ERD includes role (enum) → supports future role differentiation (e.g., admin/user), even if not implemented yet.

2.3. Operating Environment

- **Client:** Modern web browser (Chrome/Firefox/Edge/Safari)
- **Server:** Web backend (any MVC-capable framework)
- **Database:** Relational DB (ERD suggests SQL table User)
- **Security baseline:** Password hashing, server-side session/token validation

2.4. Assumptions and Dependencies

- Email and/or username must be **unique** at registration.
- Passwords are stored as **hashed values** (password_hash in ERD).
- Protected resources require **token/session validation** before access.
- System depends on:
  - Stable internet connection
  - Database availability
  - Server clock accuracy for token_expiry and timestamps

3. System Features and Functional Requirements

Describe each major feature of the system and its functional requirements.

3.1. Feature 1: Registration

Description: Guest creates an account via Registration Page; system validates input and uniqueness, then stores the user.
Functional Requirements:

- System shall display a registration form to Guests.
- System shall validate required fields and input format.
- System shall check whether email/username already exists.
- If validation fails, system shall show a clear error message.
- If valid and unique, system shall save user in the database and show registration success, then allow navigation to login.

3.2. Feature 2: Authentication & Session Management

Description: User logs in, system validates credentials, generates a token/session, and grants access to protected actions until logout.
Functional Requirements:

- System shall display a **login form** and accept username/email + password.
- System shall validate credentials and reject invalid attempts with an **invalid credentials message**.
- On successful login, system shall **generate session/token** and redirect user to **Dashboard**.
- System shall allow authenticated users to:
    - View **Dashboard**
    - View **Profile**
    - Access **Protected Pages** only if authorized
- System shall **destroy session/token** on logout and redirect to **Login**.

4. Non-Functional Requirements

Security

- Passwords must be stored using **strong hashing** (never plain text).
- Protected pages must enforce **server-side authorization checks**.
- Session/token must expire (token_expiry) and be invalidated on logout.

Performance

- Login/registration validation should respond quickly (typical target: **< 2 seconds** under normal load).

Usability

- Forms must provide **clear validation feedback** (e.g., "Email already exists", "Invalid credentials").
- Navigation after key actions must be consistent (success → next page; failure → error message).

Reliability

- System must not create partial/duplicate users (atomic registration save).
- Session handling must be consistent (no access after logout).

Maintainability

- Controllers should remain modular (Login/Registration/Profile/etc. separated as in class diagram).
- Database schema should support future role-based expansion (role enum).

5. System Models (Diagrams)

Insert the necessary diagrams for the system:

5.1. ERD

User		
PK	user_id	int
	username	varchar(255)
	email	varchar(255)
	password_hash	varchar(255)
	first_name	varchar(255)
	last_name	varchar(255)
	role	enum
	is_active	boolean
	created_at	timestamp
	updated_at	timestamp
	last_login	timestamp

5.2. Use Case Diagram

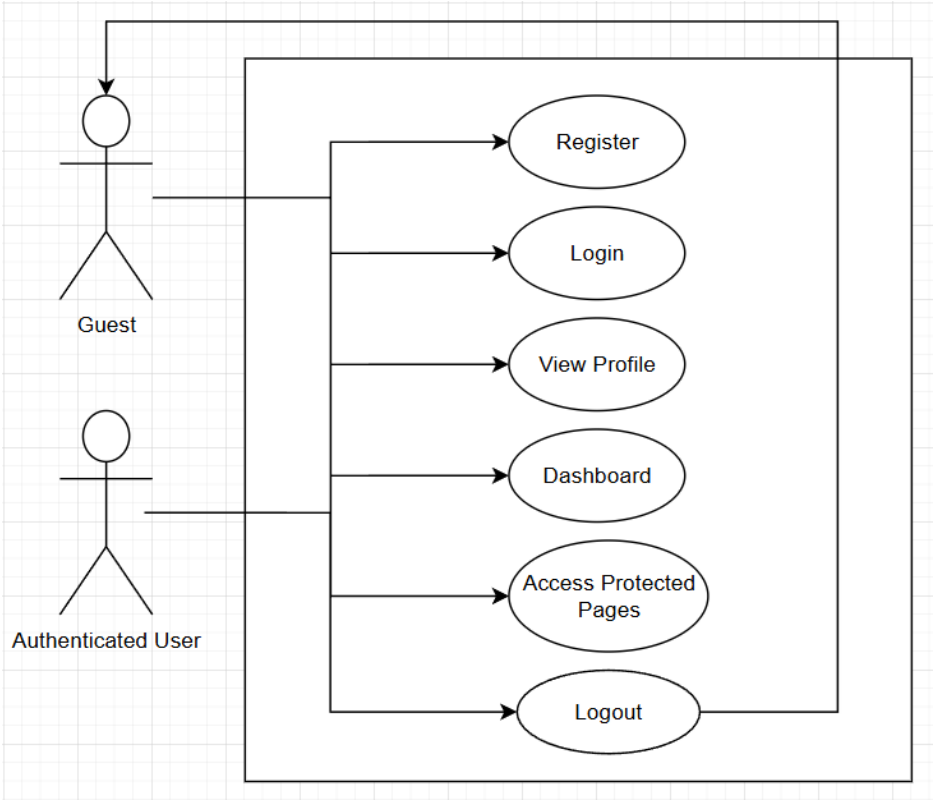

5.3. Activity Diagram

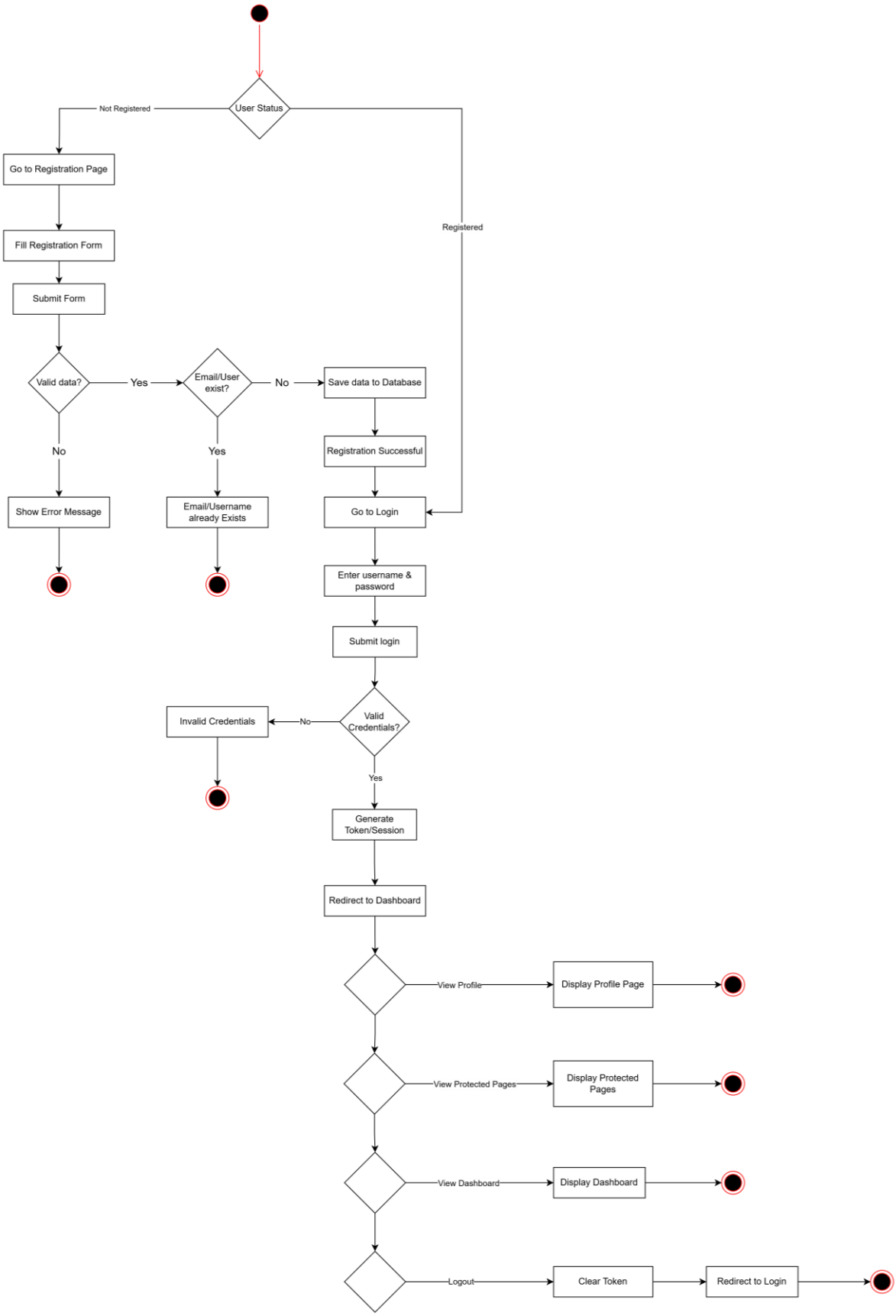

5.4. Class Diagram

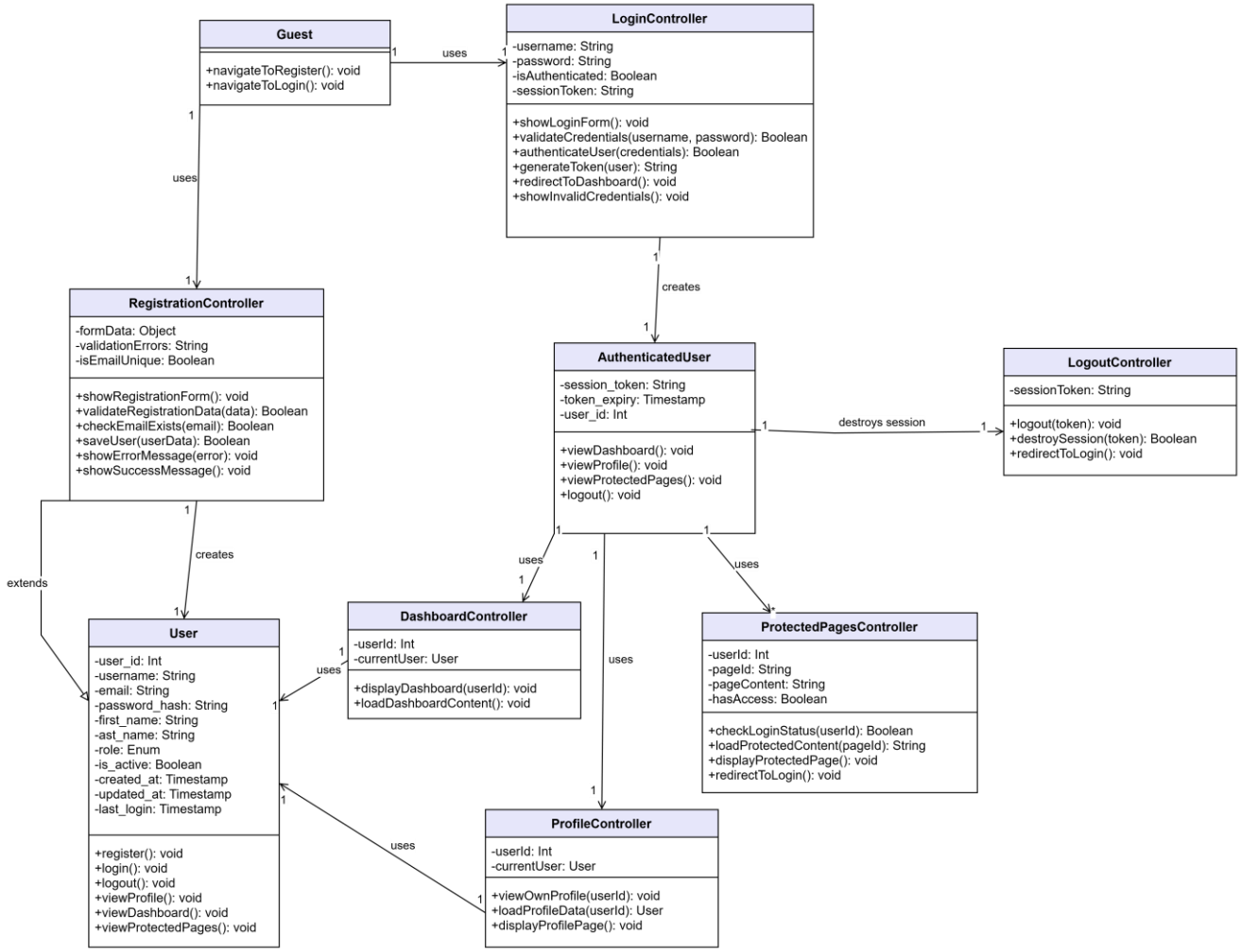

5.5. Sequence Diagram

1. Registration Sequence Diagram

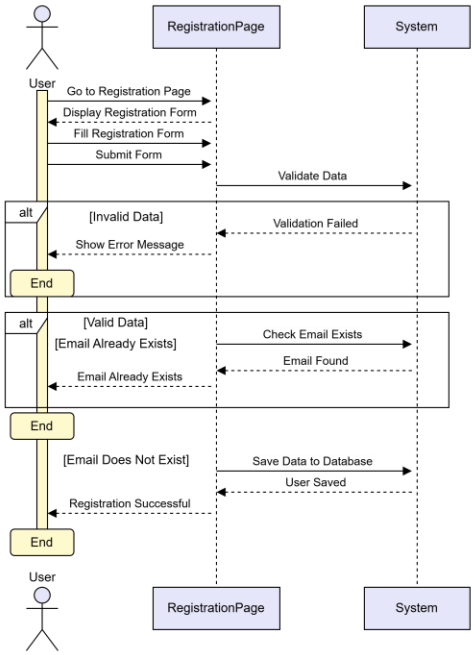

2. Login Sequence Diagram

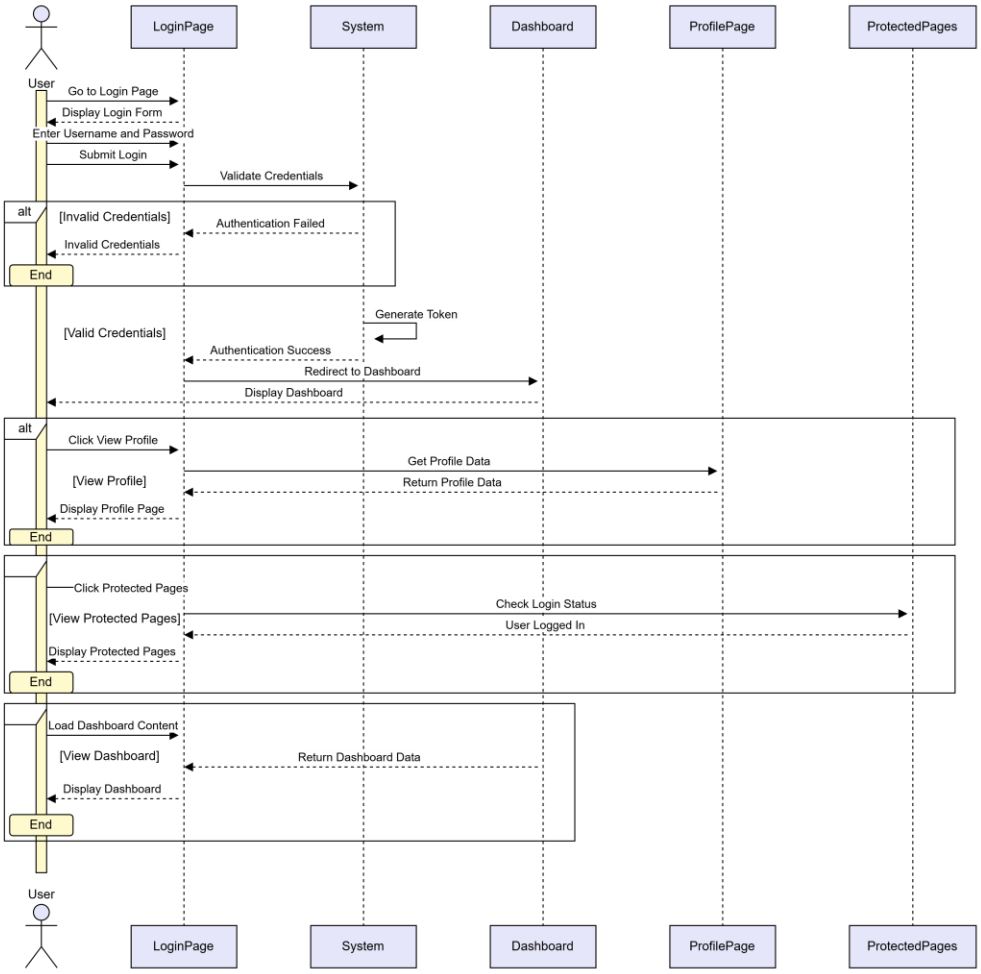

3. Logout Sequence Diagram

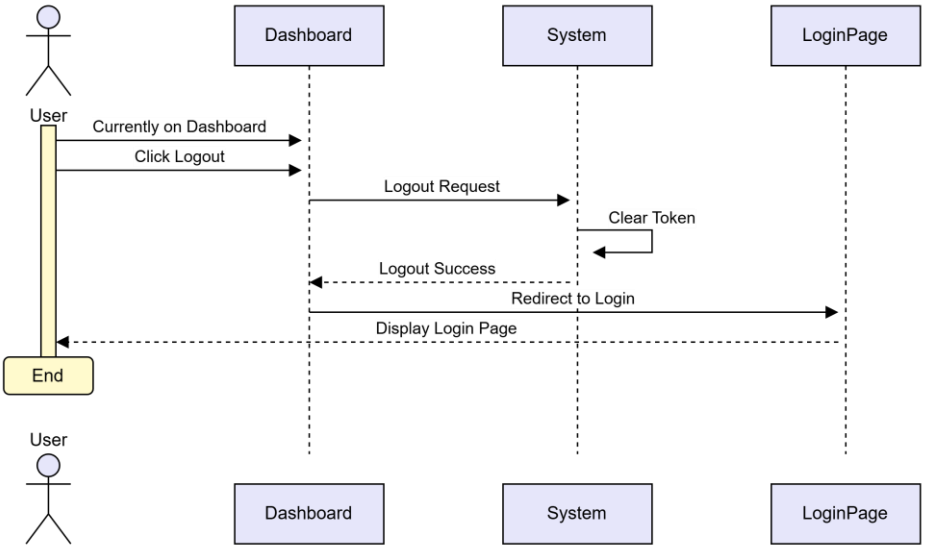

6. Appendices

Include any additional information, references, or support materials.